KALAX 3x3

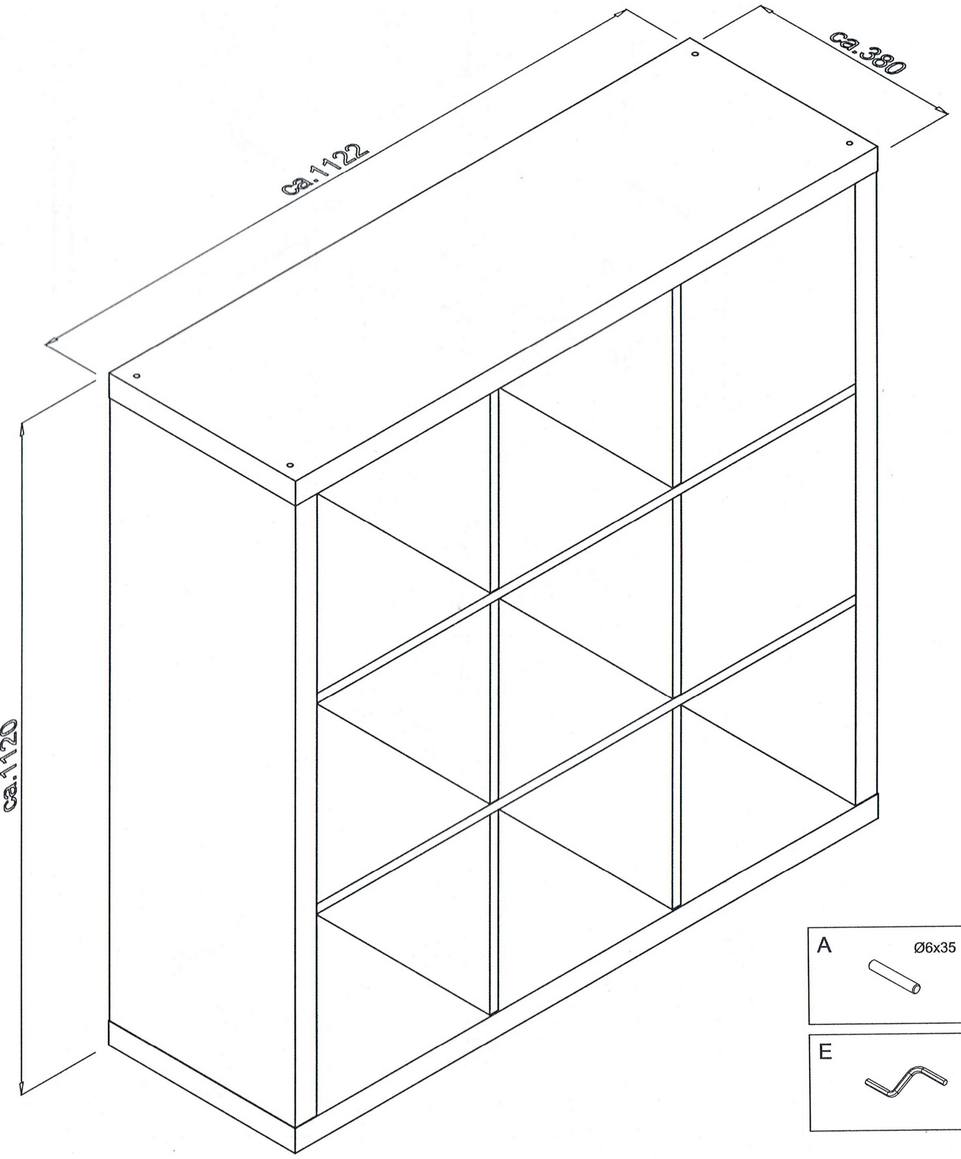

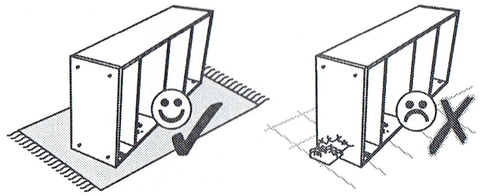

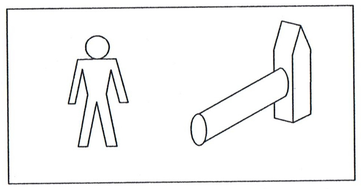

1	x2	ca. 1122 x 380 x 40
2	x2	ca. 1040 x 378 x 40
3	x6	ca. 336 x 374 x 16
4	x2	ca. 1040 x 376 x 16

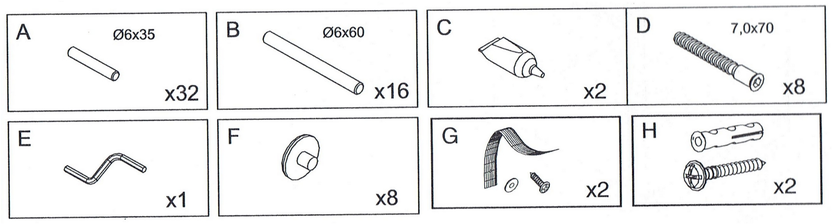

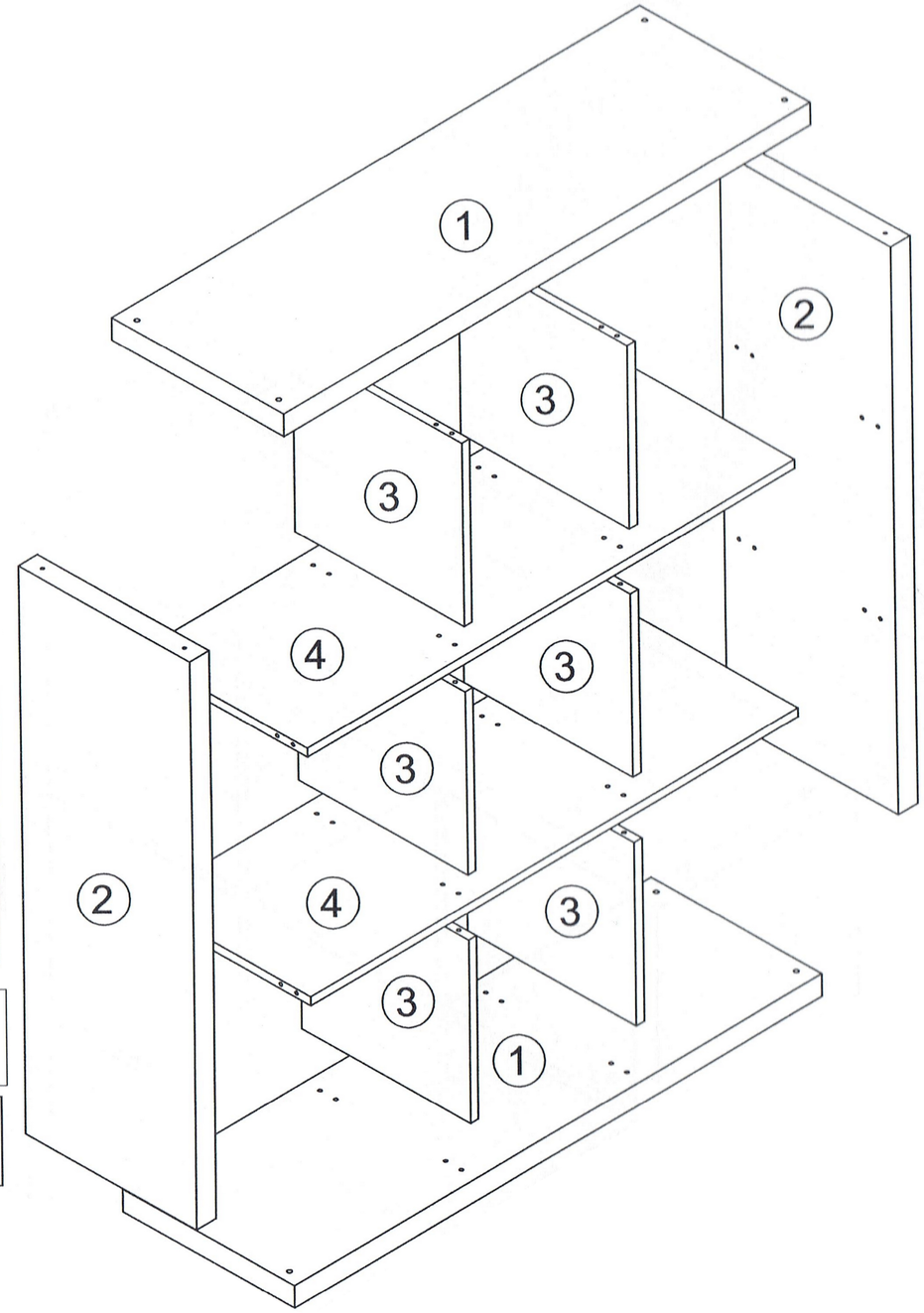

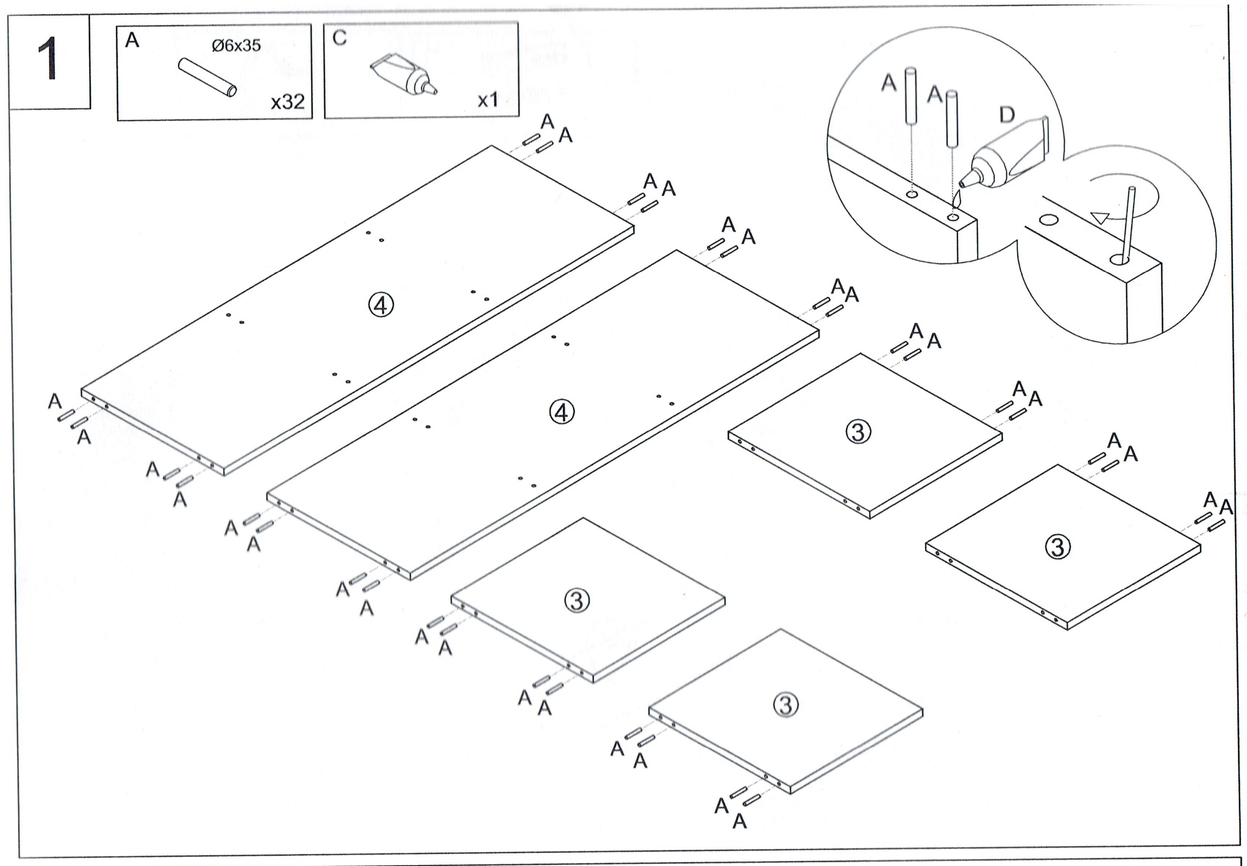
1
A
Ø6x35
x32
C
x1
A
A
D
④
③

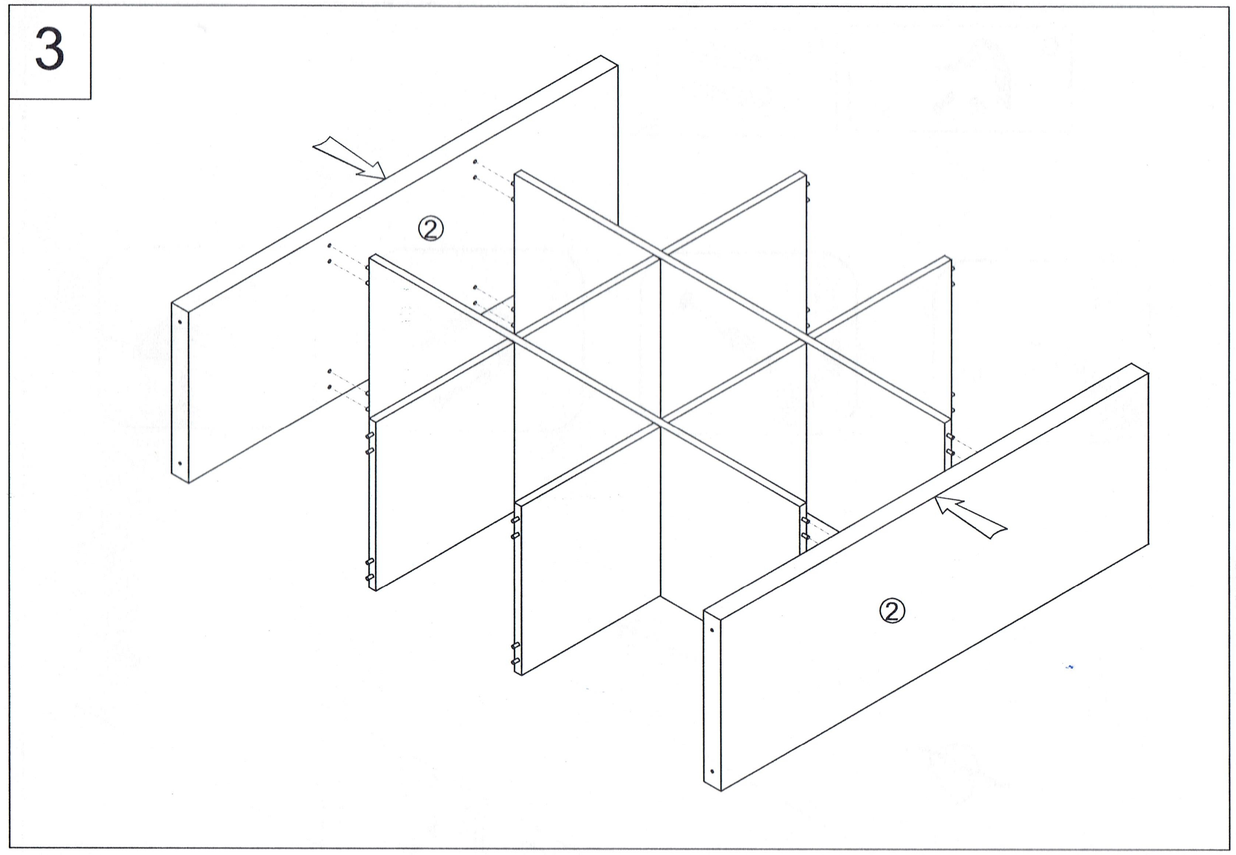
3
②

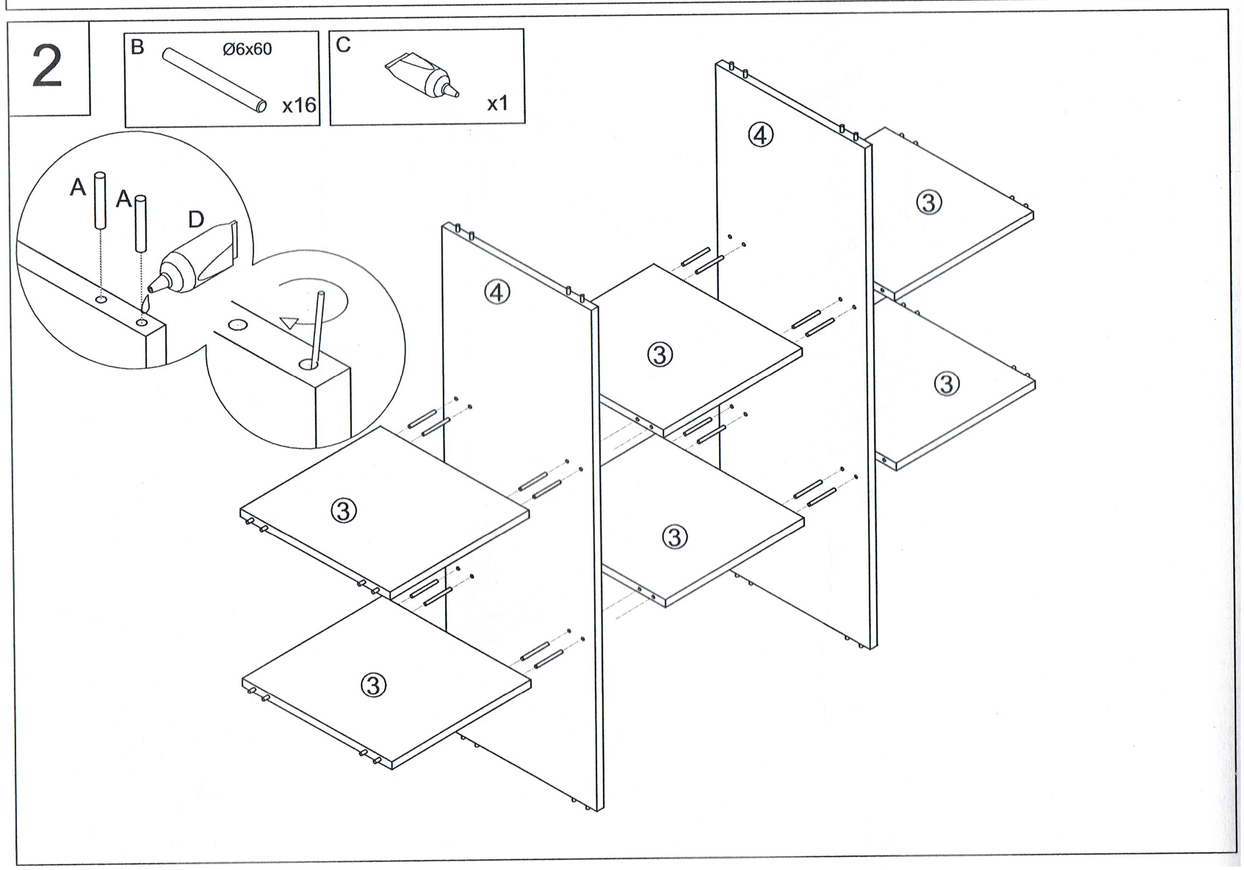
2
B
Ø6x60
x16
C
x1
A
A
D
④
③

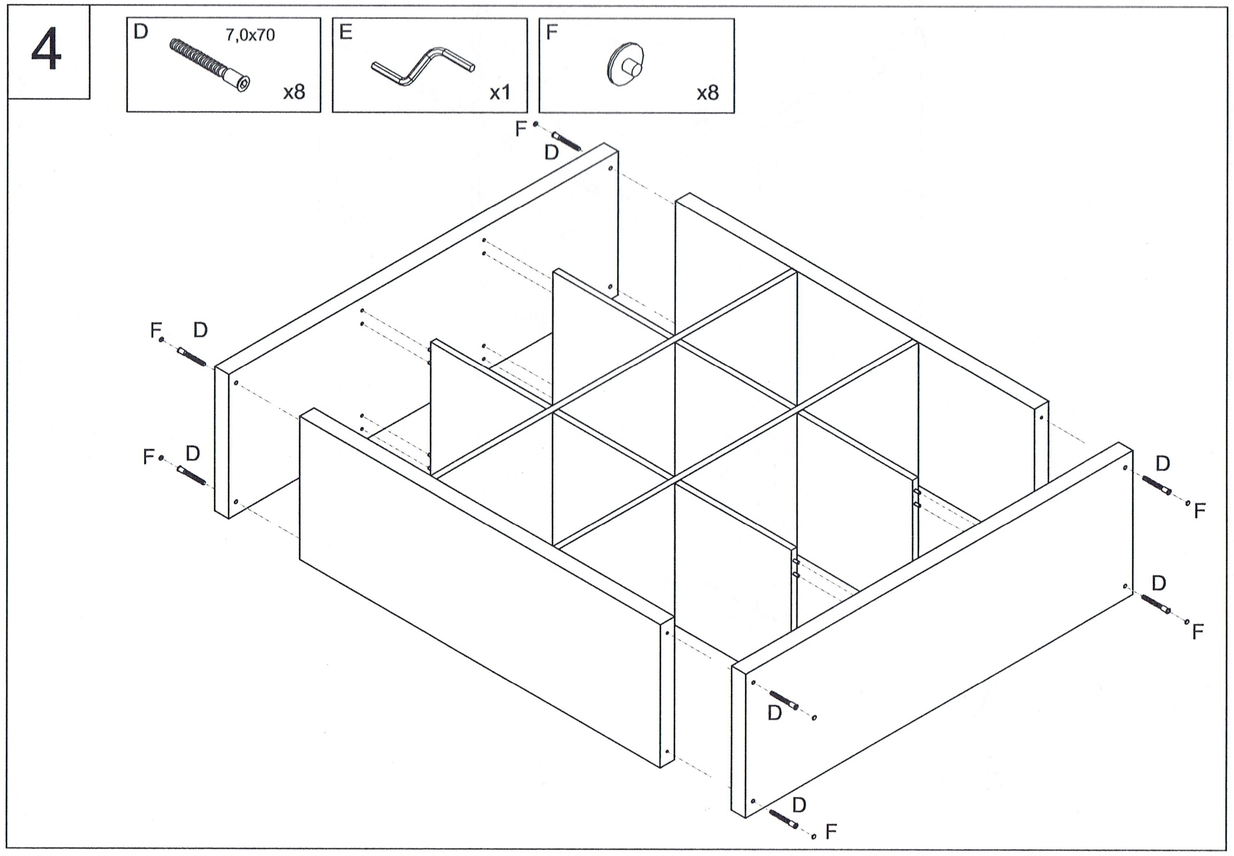
4
D
7,0x70
x8
E
x1
F
x8
F
D
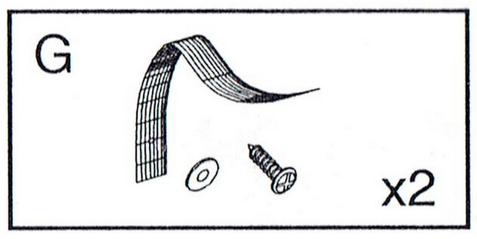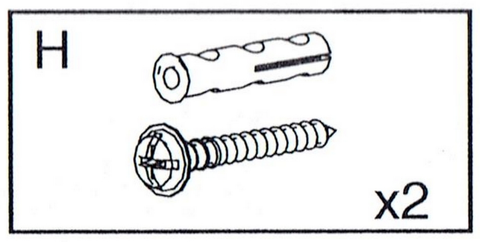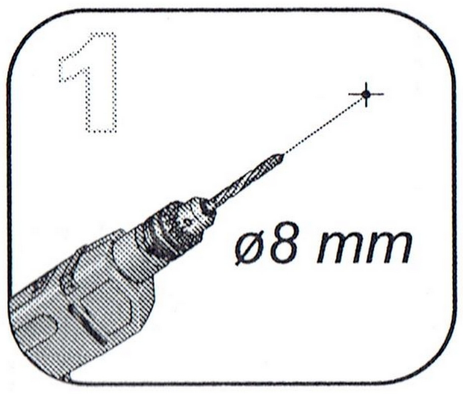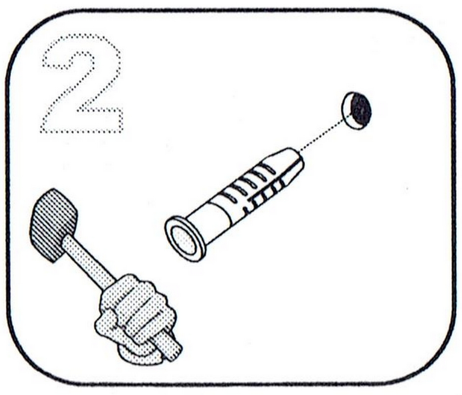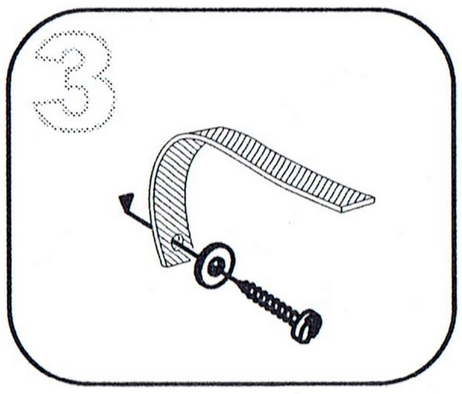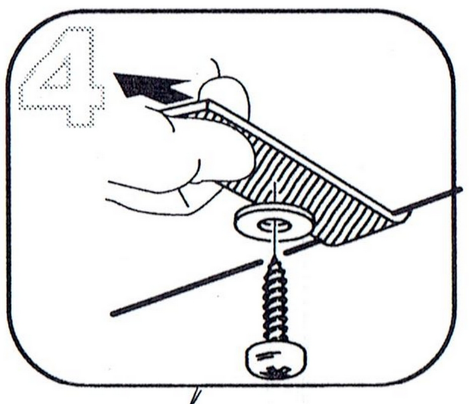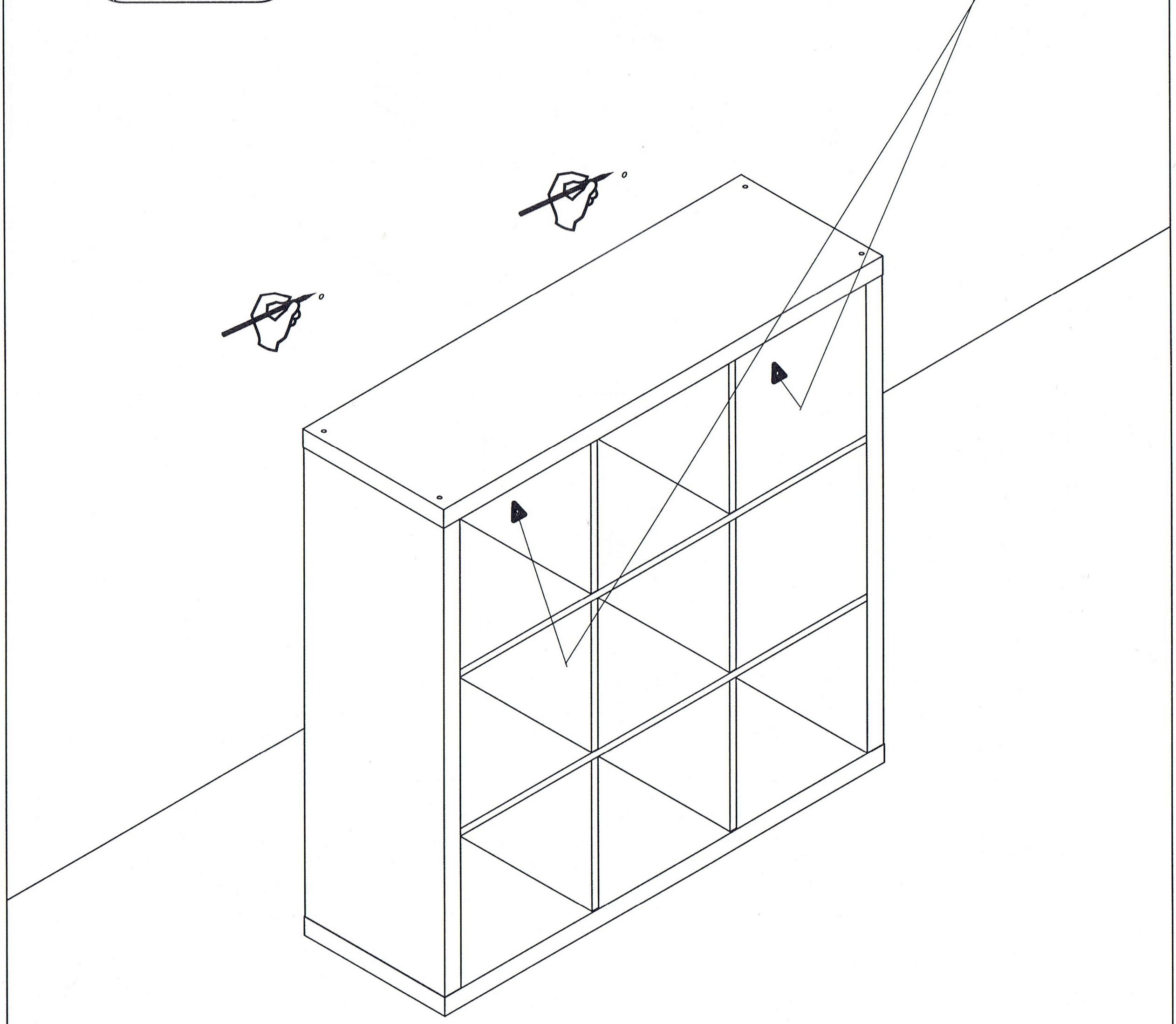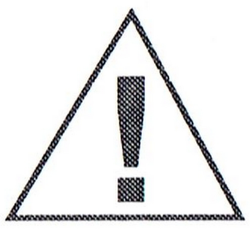
5